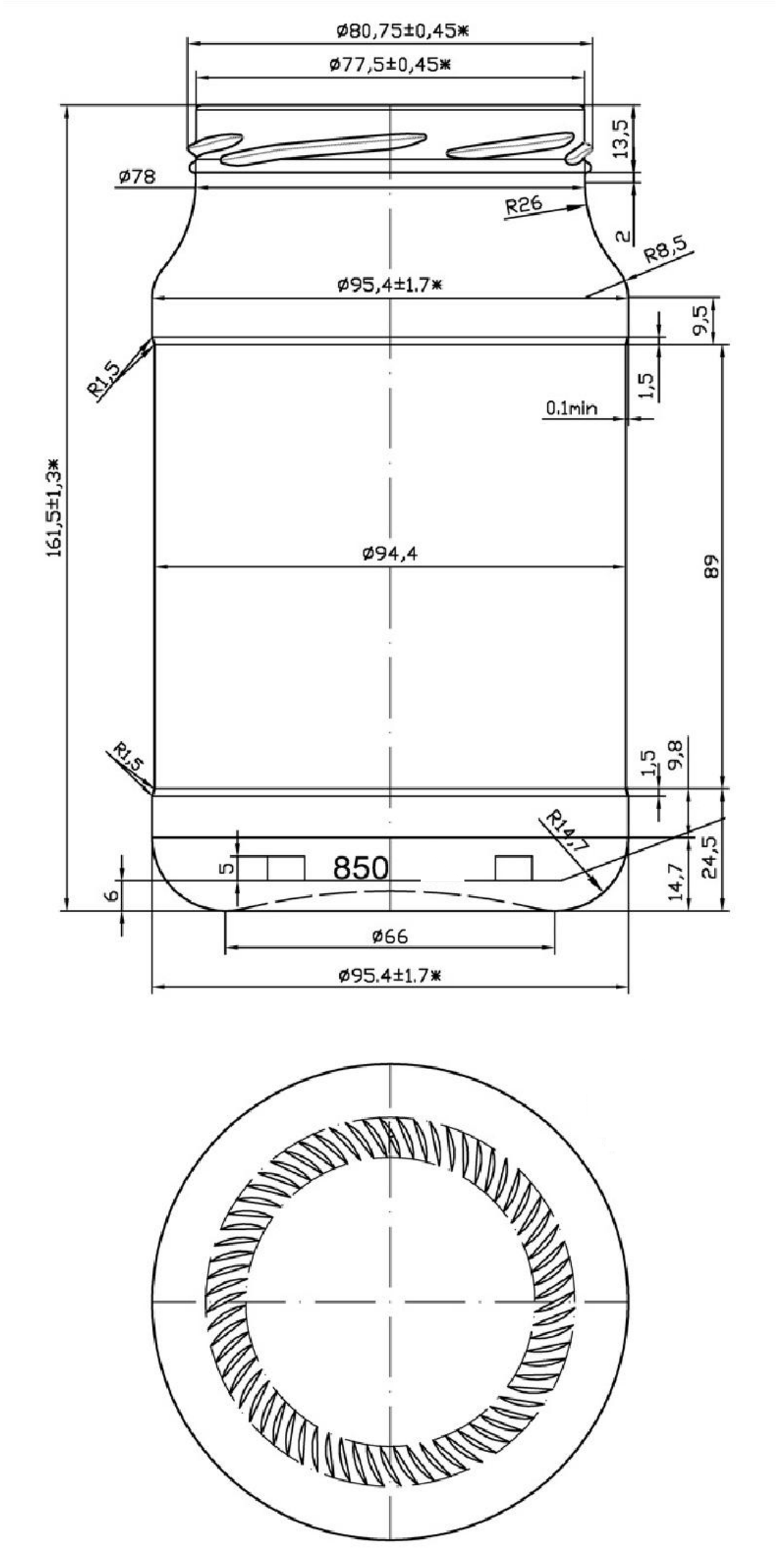

STD 850ml TO82

Height (mm)	161,50	Filing capacity (ml)	850	Reference
Diameter (mm)	95,4	Brimfull capacity (ml)	900	N/A
Finish	TO82	Colors		AVACOM proizvodnja in trgovina d.o.o. IOC Zapolje I 15 1370 Logatec SI - Slovenija
Weight (gr.)	365	Flint ☐ Amber ☐ Green ☐ Olive ☐		