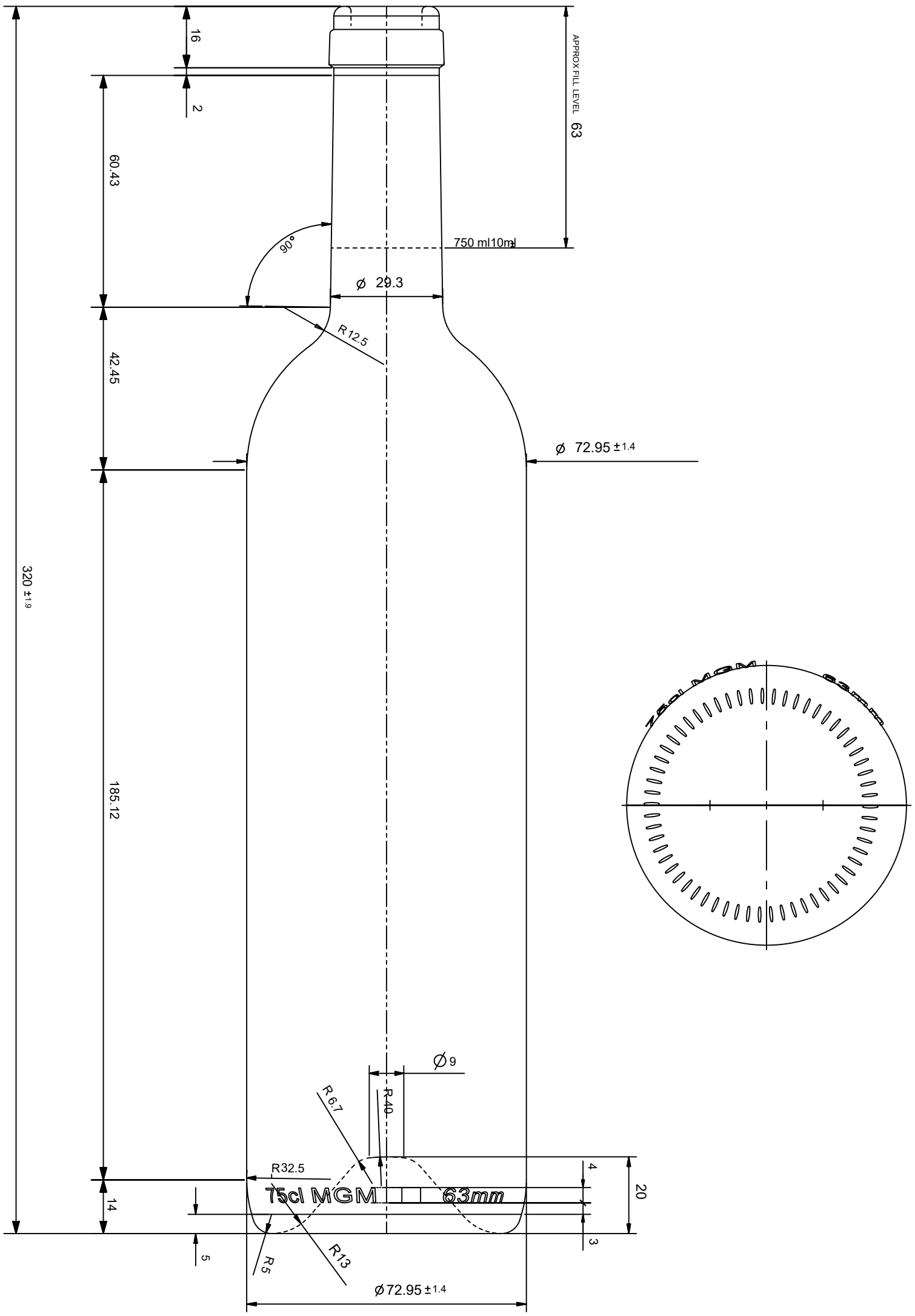

BORDEAUX GEM 750ml NOBILE CORK

Height (mm)	320,0	Filing capacity (ml)	750	Reference
Diameter (mm)	73,0	Brimfull capacity (ml)	770	N/A
Finish	NOBILE CORK	Colors		AVACOM proizvodnja in trgovina d.o.o. IOC Zapolje I 15 1370 Logatec SI - Slovenija
Weight (gr.)	510	Flint ☒ Amber ☐ Green ☒ Olive ☐		